optyma

Organic

OUR NEW 2019 INTER-PLANT WEEDING MACHINE NEW PATENT

optyma NEW PATENT

OLIVER AGRO

Our new weeding machine – with the combination of optic fiber and compressed air - will hoe the soil simultaneously between the rows and between the plants on: salads, radicchio, broccoli, cauliflower, hemp and ornamental plants..

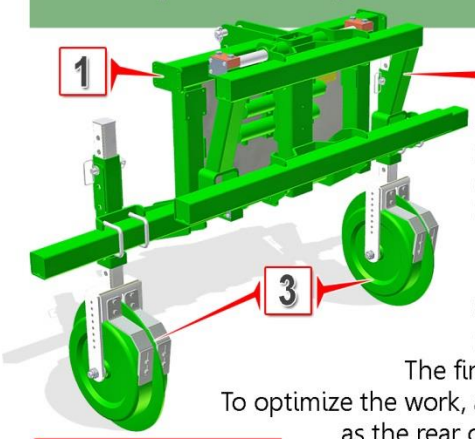

Our New optyma inter plant weeder is made up of a **double frame** one of which is **fixed (1)** to stabilize the machine and the other is **movable shifting (2)** guided by an operator or an automatic driving system; with **2 crested-wheels (3)** for stability, mecha/ nically adjustable in height (in case of beds) and with a number of **elementi (4)** that vary depending on how many rows we need to weed.

Unlike our Rotosark, the elements work **alongside** the **row / plant** and are characterized by:
(5) N°2 front-side **hoeing hoes** Dx Sx; **(6) N°2** opposed **photocells** ;
(7) N°2 rear opening **knives** for floor-level cleaning.

Series hoes for inter-row weeding and other accessories that will accompany the machine as needed

The first phase of work is the "preparation of the soil" both as a crust breaker and as for photocells. To optimize the work, a couple of front side hoes are applied in front of the row. These are placed on the same axis as the rear opening knives and have the task of removing or carrying outside the row any foreign bodies such as a stone or a weed, leveling the soil, crust breaker, cleaning and preparing the ground for photocells' reading and knives' opening. When the reading of the photocells is interrupted by the passage of the plant, an immediate impulse is sent by **photoelectric sensor** of a latest-generation **optical fiber** (hence the patent) to the control unit that commands the synchronized opening of the knives fed by compressed air through an electro-valve.

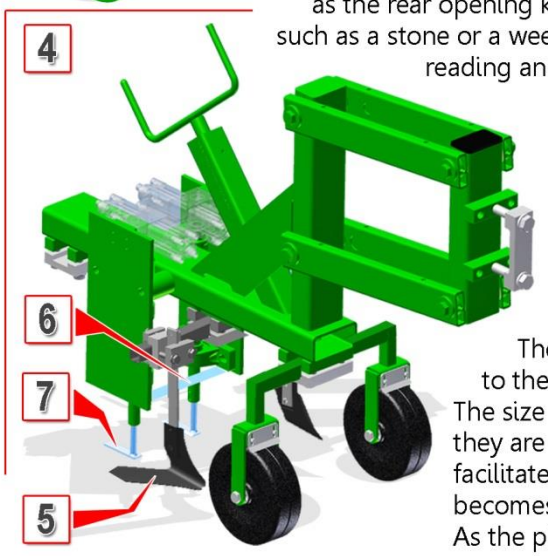

The opening is given by the interruption of the beam of the photocells, which can be positioned to determine the opening point more or less closed to the plant. They can also be positioned in height to exclude the interruption of the range of action from possible weeds.

The closure is adjustable to the need to be more or less closed to the plant according to the parameters set in the control unit, based on the crop, plant volume and feed speed The size of the opening knives varies according to the driving system adopted and generally they are 6 cm long each, a thickness of 3 mm, sharp and a width of 2 cm slightly i nclined to facilitate sliding reduce friction in the ground but always parallel so that the cut of the crust becomes a surgical operation and we do not have movements of sods on the plants.

As the plant passes, they open 90 degrees backwards, following the feed and thus making a small radius.

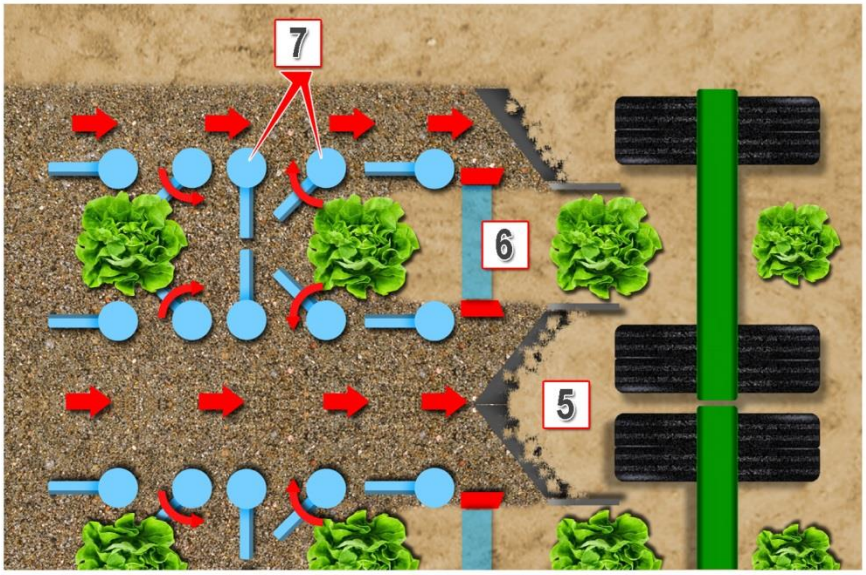

The movement in this case is a movement that subtracts and does not add to which the system will not pour or throw soil on the plants.

The depth of work is just below the crust of the soil so we are not going to touch the pot or the root of the plant (it is adjustable according to need).

The inter-row distance is adjustable according to requirements, such as the number of rows and the composition of the machine itself.

Average speed 1.2 km/h 1.5 km/h

If I slow down the speed and the beam of the photocells is interrupted, the closing time is different, therefore the small knife remains opened for safety so as not to ruin the plants.

OLIVER AGRO

OLIVER AGRO S.R.L.
Via Torre, 350 - 37056
ENGAZZA' DI SALIZZOLE (VERONA) - ITALY
Tel. +39 045 6954392 - Fax. +39 045 6954408
info@dittaoliver.com - www.oliveragro.com